130 Pi 13'-10" Span x 8'-5" Rise
Multi-Plate Pipe Arch

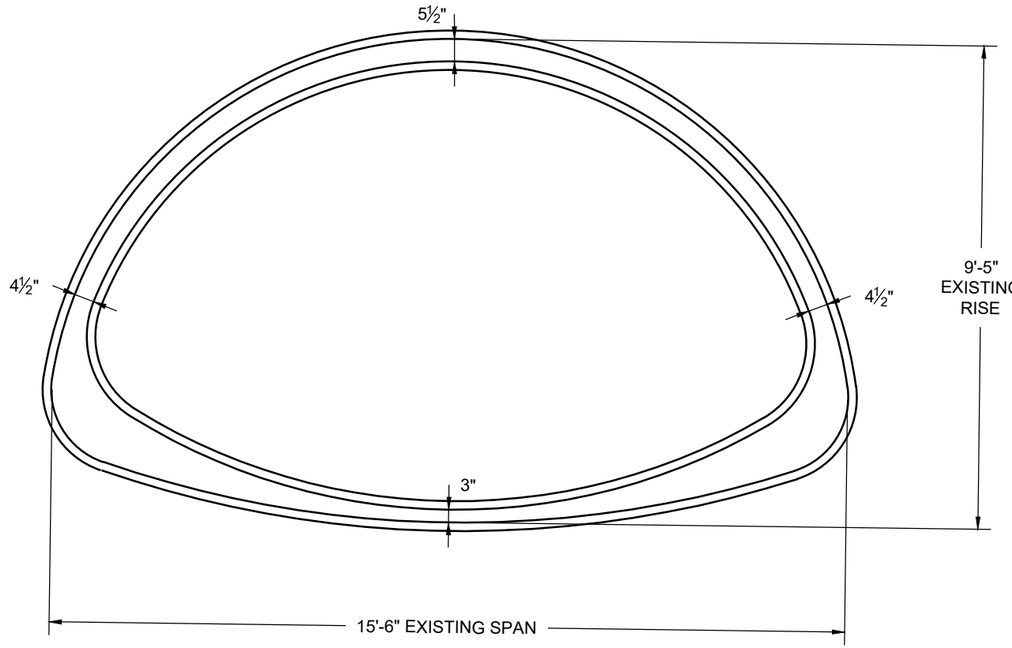

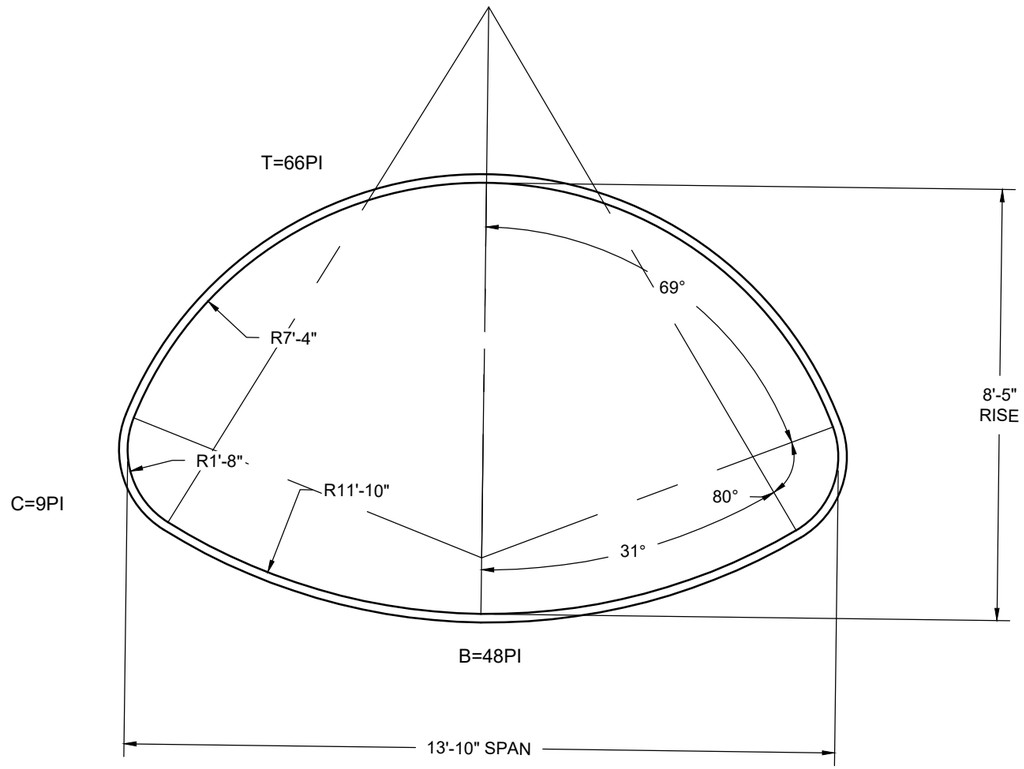

APPROX AREA = 88 SQ. FT.
TOTAL PI = 130 PI

NOTES:

1) MEASUREMENTS ARE TO THE NEUTRAL AXIS OF THE CORRUGATIONS.
2) DIMENSIONS ARE SUBJECT TO MANUFACTURING TOLERANCES.
3) CIRCUMFERENTIAL PLATE LENGTHS ARE IN TERMS OF PI = 3.14 INCHES.